Telecommunications Heritage Journal

Issue Number 137 Autumn 2026 ISSN 1353-0097

THG

In this Issue

Postcard from 1947
TCI 40th Anniversary
NTT museum, Tokyo
Long way to save a phone box
So what's a howler?

thg.org.uk

Telecommunications Heritage Journal

Published four times a year by the Telecommunications Heritage Group, an independent, non-profit making group run by enthusiasts for enthusiasts. The views and opinions expressed in the TH Journal are not necessarily those of the Editor, Group Officers or Official Group Policy.

© THG and Contributors 2026

Journal Copy

Articles, letters, advertisements and other material for publication will be printed in the next issue having space available.

Telecommunications Heritage Journal editorial address:

John Mulrane, Callystown, Clogherhead,
Co. Louth, A92 C2X8, IRELAND

E-mail: vicechair@thg.org.uk

Annual Subscription Rate

UK Membership	£20
On-line only (not UK)	£8
European Membership	£44
Zone 3 Membership (USA)	£48
Zone 2 Membership (eg Australia)	£42.80
Zone 1 Membership (Other overseas areas)	£48
Young Member (Under 18, requires approval)	£10

New members may join online and existing members may check their status and renew at **thgmembership.org.uk**

If you have Internet access, but do not know your login for the membership system, you may e-mail the membership secretary (**membership@thg.org.uk**) who will enable your account and send you details.

Members without Internet access may continue to send renewal payments directly to the THG address (as shown below) when their renewal becomes due. One reminder will be sent by post at the appropriate time. Your expiry date for membership is always shown on your journal address label along with your membership and database references.

Contacting Other THG Members

In accordance with members' wishes, we do not publish names and addresses or telephone numbers. If you wish to get in touch with another member please put your letter in a stamped envelope marked with the recipient's name and send this in another envelope to:

THG
Crown House
27 Old Gloucester Street
LONDON
WC1N 3AX

Our web presence:
https://lnk.bio/TelecommunicationsHeritageGroup

Chairman's Welcome

Brenden Hill

A warm welcome to the Autumn edition of the THG Journal, and I hope that you have been managing with the hot and very dry summer weather. In June members enjoyed another swap meet at a Railwayana event at the Great Central Railway, which proved to be an enjoyable visit. There was also the opportunity to travel along the line and enjoy some railway heritage and steam locos.

It won't be long before we hold the Milton Keynes swapmeet which will be the last one of the year. This event is always well attended and also offers members the opportunity to visit Milton Keynes Museum with there excellent telecoms section.

Following Andrew Emerson passing away late in 2025, Jason Workman Ruby Ella Monnery and Andy Grant have picked up the TIM2015 project, and they hope to show the new improved TIM2015+ version at the Milton Keynes.

This has been a significant piece of work, which has involved sourcing the required hardware items and updating the software. I look forward to catching up with you at Milton Keynes in October.

Cover picture: Andy Emmerson pictured at an early swapmeet in 2001 [SH]

Contents

Chairman's Welcome....2
Postcard from Telephone Exchange 1 in 1947....4
Isle of Man Telephone Boxes....5
TCI 40th Anniversary....6
Old Time Telephones by Ralph O. Meyer - Third Edition....8
Visit to the NTT History Center in Tokyo....9
Long way to save a phone box....12
David Waters: Obituary....13
So What's A Howler?....14
THG Online Virtual Swapmeet Group On Facebook....19
THG Facebook Group - Recent Activity....20
Puzzle Page....22
THG Committee....23
Events....23

We welcome your articles and letters (please mark clearly if they are not intended for publication). We prefer that material for publication is submitted by e-mail (to journal@thg.org.uk) or else on computer disc to the address above. Text files can be sent in Word or plain text format, with illustrations provided as separate individual image files. Images may be embedded inside Word files as an indication of their position in the article but it is essential that separate files be submitted. Word files should not have extraneous formatting or stylising (headers, footers, horizontal rules, coloured text and border or anything else that will not appear in our Journal). We also request that all documents should be run through a spelling checker before submission. We are happy to receive typewritten or handwritten articles if you don't have a computer! We can also scan your photographs or drawings. If you expect a reply or the return of your material please remember to include a stamped, self-addressed envelope. Also, if you intend to use copyright photos or drawings you must provide written permission from the copyright owner, as otherwise we cannot use them. Please indicate on submission of your material if you wish to place any restrictions on its use by the THG. You might consider using a free, simple Creative Commons licence (see creativecommons.org) to clarify your intentions.

You will always retain copyright of your material but by submitting to the THG's Journal team you grant us permission to publish your material in the Journal and on the THG website. Please do not submit articles, drawings or photographs if you do not agree with these terms. Copyright is a complex subject, particularly as regards old photographs, so feel free to e-mail the editor if in doubt. If you do not wish your name, address or other contact details published in the Journal, please make this clear when you submit material. You may use the THG's Dalton House address (on P4) if it's necessary for other members to contact you.

Contributors should bear in mind that copies of the Journal, although provided to THG members on a subscription basis, are also made available to non-members by the committee (to encourage fellow enthusiasts to join our group). Current and past THG members are free to sell or give away their old copies of the Journal without restriction of course.

Whilst every care is taken in the production of this Journal, the Editor and the Group accept no legal responsibility for the advice, data or opinions expressed. The views and opinions expressed are not necessarily those of the Editor, Group Officers or official Group policy. No guarantee of accuracy is implied or given for the material herein. Authors alone are responsible for the content of their articles, including factual and legal accuracy. From time to time uncredited items appear in this publication; every effort is made to avoid infringing copyright and the Editor trusts that any unintended breach will be notified to him so that due acknowledgement can be made. The contents of the Journal are covered by copyright and must not be reproduced without permission, although an exception is made for other not-for-profit publications (only) wishing to reprint short extracts or single articles if acknowledgement is given to this Journal. All trade names and trademarks are used with acknowledgement. BT and Post Office images are used with permission of BT Archives.

Postcard from Telephone Exchange 1 in 1947

Ole Warrelman

As with many historical accounts, the people or eyewitnesses who can recount historical events disappear over time. I recall that a former telecommunications technician with the German Federal Post Office and fellow collector told me that after the Second World War, there were so few telephones that one could hand over other people's equipment to the Post Office to get a telephone connection. In return, however, the equipment became the property of the Post Office. According to the story, my colleague (Günter Laser †) himself had discovered a TEFAG desk telephone connected to a main line in West Berlin as recently as the 1960s. At that time, he wasn't yet collecting telephones, and so the faulty handset ended up with a telephone repair specialist/colleague. As a later telephone collector, he didn't find a comparable device until the late 1990s. That's the story as it was passed down orally. But were there really third-party devices connected to the main lines of the German Post Office / German Federal Post Office?

Absender: Fernsprechamt 1
Düsseldorf
Haroldstr. 40
Wohnort, nach Zonen- oder Leitgebiet
GERMAN
Straße, Hausnummer, Gebäudeteil, Stockwerk oder Fernsprechnummer
bei Unternehmen auch Name des Vorstehers
Postkarte
DÜSSELDORF 1
28.4.47-18
X
Herrn
Frs. Hymm
Düsseldorf
Oberbilker Allee 47
Elektrische Anlagen
Straße, Hausnummer, Gebäudeteil, Stockwerk oder Fernsprechnummer, bei Unternehmen auch Name des Vorstehers
Posisache
(11. 46: 8 000 000)
C 154

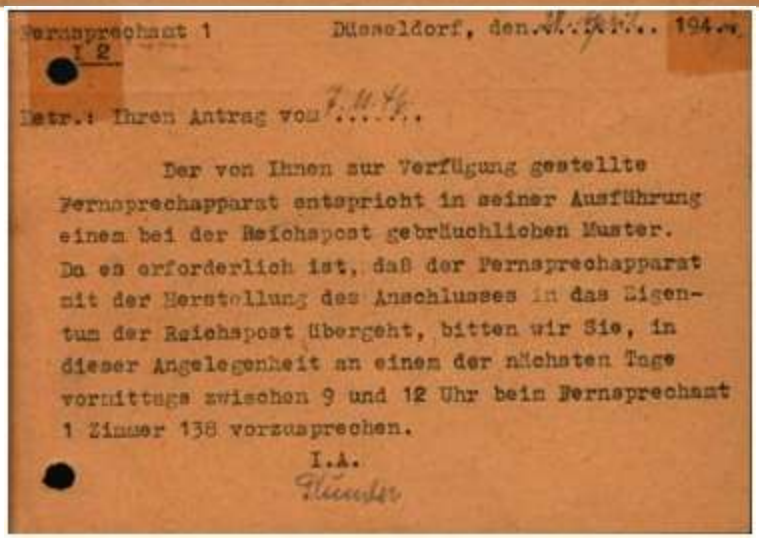
Fernsprechamt 1 Düsseldorf, den [illegible] 194[illegible]
I 2
Betr.: Ihren Antrag vom [illegible]

Der von Ihnen zur Verfügung gestellte Fernsprechapparat entspricht in seiner Ausführung einem bei der Reichspost gebräuchlichen Muster. Da es erforderlich ist, daß der Fernsprechapparat mit der Herstellung des Anschlusses in das Eigentum der Reichspost übergeht, bitten wir Sie, in dieser Angelegenheit an einem der nächsten Tage vormittags zwischen 9 und 12 Uhr beim Fernsprechamt 1 Zimmer 138 vorzusprechen.

I.A.
[illegible]

The postcard text reads:

Re: Your application of November 7, 1946 The telephone you provided corresponds in its design to a model commonly used by the Reichspost (German Postal Service). Since it is necessary for the telephone to become the property of the Reichspost upon connection, we request that you speak to someone about this matter at Telephone Exchange 1, Room 138, on one of the next few mornings between 9:00 and 12:00.

The “find,” or rather the postcard from Telephone Exchange 1, Düsseldorf, dated April 28, 1947, shows that this pragmatic approach to bridging the shortage of new telephones did indeed exist after the Second World War. A portion of postwar production also went to the Allies in the occupation zones. The processing time of approximately six months also demonstrates the difficulty of rebuilding the telephone network in the postwar period.

TEFAG Table telephone

Isle of Man Telephone Boxes

Richard Haydon

We spent a few days in the Isle of Man in July, on our travels I took a few photos of their telephone boxes. All were red K6 kiosks with gold crowns, the only difference from the ones on the mainland being most had their doors on the side rather than the front, I have no idea why.

We stayed in an hotel in Ramsey which was in a lovely location over-looking the sea at the front and a lake behind.

Bride

The one in Bride had no door at all, perhaps it was away for repair! They all still had usable telephones in them.

Behind the one at Derby Castle, Douglas is the garden where there is a memorial to the fifty people who lost their lives in the Summerland fire in 1973. Two of my school friends died in the fire and it was nice for me to finally visit the memorial and to know that they are remembered by the islanders. This is also the terminus for both the Douglas Horse Tram, which goes along the promenade, and the Manx Electric Railway, which goes up to Ramsey via Laxey.

The ones in Peel and Port Erin were right on the sea front.

Douglas

Port Erin

Ramsey

Peel (AI manipulated)

TCI 40th Anniversary

Rick Myles

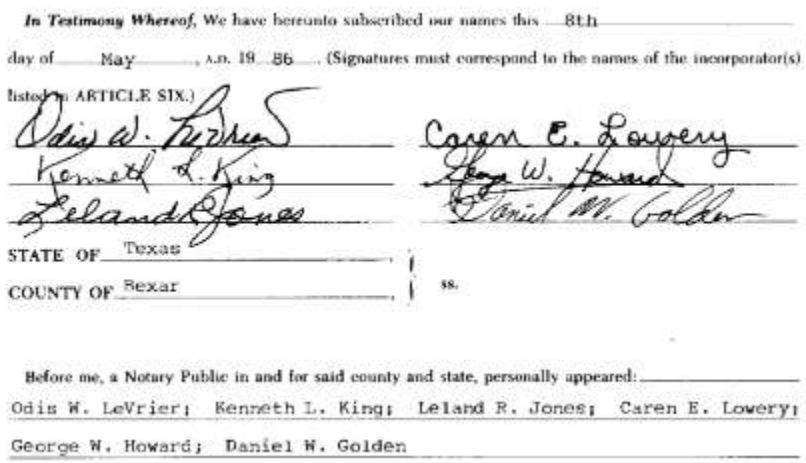

In Testimony Whereof, We have hereunto subscribed our names this 8th day of May, A.D. 19 86. (Signatures must correspond to the names of the incorporator(s) listed in ARTICLE SIX.)

Odis W. LeVrier — Caren E. Lowery
Kenneth L. King — George W. Howard
Leland R. Jones — Daniel W. Golden

STATE OF Texas, COUNTY OF Bexar, ss.

Before me, a Notary Public in and for said county and state, personally appeared:
Odis W. LeVrier; Kenneth L. King; Leland R. Jones; Caren E. Lowery; George W. Howard; Daniel W. Golden

On May 8th, 1986, six men appeared before Anita Foster, "Notary Public in and for Bexar county, Texas" and signed the Articles of Incorporation (top image) for Telephone Collectors International. The city, unmentioned in the document, was most likely San Antonio. Although the men met in Texas, they incorpo- rated TCI under the laws of Kansas. Why they met in Texas is unknown, but they incorporated in Kansas be- cause of the ease of the Kansas in- corporation process. Bottom image shows the signatures of the founders.

We think Leland Jones may have had a lot to do with the selection of Kansas because the articles specify 249 South Minnesota, Wichita KS, Mr. Jones' home address, as TCI's "registered office in Kansas". Although TCI's address has changed a couple of times, we remain a Kansas corporation, with a Kansas address, and must file, every two years, a "Not for Profit Corporation Report" with the state of Kansas. This report must list the names and addresses of our officers and board of directors.

Our founders established TCI as an organization for telephone collec- tors, not dealers, as a club for people who want to collect, enjoy, and preserve telephones and tele- phone equipment, knowledge, and history. Today, the physical equip- ment resides in the hands of our members, while the history and knowledge reside in our minds and in the TCI Library, a gigantic, and grow- ing, collection of historical and techni- cal telephony.

For more on TCI's history, read the first page of the inaugural issue of Singing Wires (reprinted opposite), where the founders state our funda- mental goal: "TCI is a not-for- profit historical society comprised of indi- viduals who share an interest in investigating and preserving the his- torical aspects of telephony." Members can read ALL the back issues of Singing Wires.

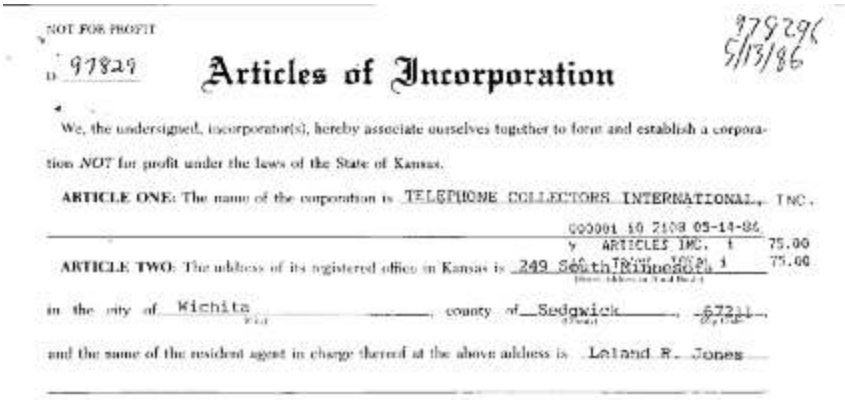

NOT FOR PROFIT
D 97829
979296 5/13/86

Articles of Incorporation

We, the undersigned, incorporator(s), hereby associate ourselves together to form and establish a corporation *NOT* for profit under the laws of the State of Kansas.

ARTICLE ONE: The name of the corporation is TELEPHONE COLLECTORS INTERNATIONAL, INC.

000001 10 7108 05-14-86
ARTICLES INC. 1 75.00
TRANS FEE 1 75.00

ARTICLE TWO: The address of its registered office in Kansas is 249 South Minnesota in the city of Wichita, county of Sedgwick, 67211, and the name of the resident agent in charge thereof at the above address is Leland R. Jones

TCI focuses on wireline teleph- ony, which began on March 10th, 1876, when Bell, the "father of the telephone," called from one room of his Boston laboratory to Watson in another room, and spoke his fa- mous, but apocryphal, words "Mr. Watson, come here" over the wires between the rooms.

Wireline began its decline (al- though we didn't suspect it then) on April 3rd, 1973, when Martin Cooper made the first cell phone call from a New York City street. With the concept "What technology gives, technology takes" in mind, we could argue the decline began much earlier, on December 23, 1947, when Bell Labs invented the transistor, the device that eventually made cell tele- phones possible.

In 1878 Theodore Vail, the "father of the telephone company," began shaping AT&T into the ubiquitous service, manufacturing, and re- search colossus we all grew up with and knew so well. In those Bell- domi- nated wireline decades we could all say, "That black telephone in my living room? Everyone in America has one exactly like it."

Then, on January 8th, 1982, the US Government, in one of its brighter moves, threw Ma Bell into the trash. Our founders formed TCI just four years later.

Today, as wireline telephony fades from public awareness, TCI stands ready to preserve the memory of this critical technology that meant so much to the world for over one hundred years.

THG Members are welcome to join TCI: https://www.telephonecollectors.org/member.htm

TELEPHONE COLLECTORS INTERNATIONAL Inc.

"A Historical Society"

INAUGURAL ISSUE

JUNE 1986

Dear Telephone Collector:

This complimentary first issue of the Telephone Collectors International (TCI) newsletter is to advise you of the formation of TCI and to provide you with a membership enrollment form.

TCI was incorporated May 13, 1986 in the state of Kansas. Kansas was chosen because its laws facilitated our incorporation process. Leland Jones, Wichita, KS is TCI's registered agent. The newsletter will be published in San Antonio, Texas by Caren Lowery, operations manager. Bob Lindell, Buffalo, MN, will serve as Secretary/Treasurer and George Howard, Attorney at Law, Albany, NY, will act as TCI's general counsel.

TCI is a not for profit historical society comprised of individuals who share an interest in investigating and preserving the historical aspects of telephony. The TCI organizational structure includes twenty-one directors who elect a President, Vice-president of Operations, and Secretary/Treasurer. Each year seven directors will be elected for three year terms. A director will be limited to two consecutive three year terms. The benefits of such a structure are many. The most important being the many channels of communication between the management and the membership. With twenty-one directors, the decisions made should reflect the desires of the majority of the members.

As a new organization, we have many ideas, objectives and goals. The first objective is the monthly newsletter which, next to our membership, will be the cornerstone of the organization. Personal classified ads will be an important part of the letter, but current plans mandate the letter to be more than just a clearing house for old telephones. It will also be a vehicle to educate, to inform and to promote.

Ranking second on the list of TCI objectives is a first class annual show. Tentatively, the first annual show/meeting has been scheduled for one year from now, in the summer of 1987. The exact location and date will be determined shortly. It has been decided to hold the show in a location that maximizes attendance which usually equates to minimizing traveling distances for the greatest number of people. We are presently evaluating cities such as Chicago, St. Louis and Kansas City, all of which have a major airport.

I hope this has given you a brief overview of TCI and that you choose to join the organization. The annual membership fee is $18.00 if you reside in the U.S. or Canada and $25.00 for all other countries. We have applied to the IRS for their designation as a tax deductible, charitable organization. After the paperwork has been finalized, receipts will be issued for your personal tax use. All monies donated to TCI, including enrollment fee, yearly donations for ads, auction items, etc. should qualify as tax deductions.

Barry Erlandson
President

BOARD OF DIRECTORS:
Tom Adams, Georgia
Walt Aydelotte, New York
Bill Elsasser, New York
Dick Erickson, California
Barry Erland son, Illinois
Alvin Esslinger, Alabama
Al Farmer, Nebraska
Dan Golden, California
James Goodwin, Missouri
Lynn Graves, Colorado
Geoff Hillestad, Minnesota
George Howard, New York
Leland Jones, Kansas
Ken King, Oklahoma
Bob Lindell, Minnesota
Odis LeVrier, Texas
Caren Lowery, Texas
David Silver, Oklahoma
Margaret VanNortwick, KS
Malone Watts, Kansas
Alan Young, Canada

FOREIGN CONSULTANTS:

Uwe Breker, Editor
..HISTORICAL OFFICEWORLD
Köhl, West Germany

Frank Soden, Director
AUSTRALIAN HISTORIC TELEPHONE SOCIETY
Boronia, Australia

P.O. BOX 700165 **SAN ANTONIO, TEXAS 78270-0165** **Tel: 512-496-0575**

Old Time Telephones by Ralph O. Meyer - Third Edition

Editorial

The third edition which was published in 2018 was only available in electronic format as a free PDF download.

The first two editions got a lot of circulation, so Ralph is now hoping for better distribution of the 3rd edition now that it's on Amazon. There are no royalties payable to Ralph in order to get the book printed at a low price. Kindle Direct Publishing (KDP) -- or their computers – charge nothing, and the book is still the same as the North Carolina State University (NCSU) version, except new ISBN numbers and a different cover. It is now available in hardback, paperback, and Kindle versions. KDP prints these books on demand, and they have several printing machines scattered around the world so shipping is usually local and inexpensive (sometimes free).

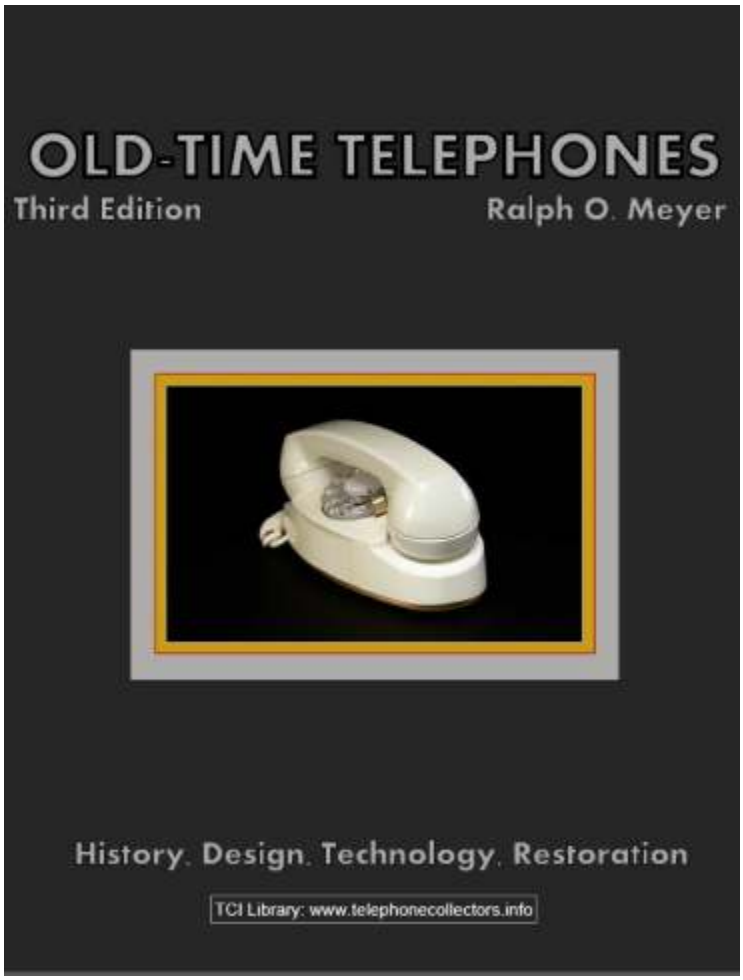

Amazon UK Pricing

Kindle edition £2.22, Paperback edition £7.99, Hardback edition £12.58.

The PDF version is available at www.docs.thg.org.uk, by courtesy of Ralph Mayer and Telephone Collectors International.

Visit to the NTT History Center in Tokyo

Holger Junghardt

Although I had already visited Japan many times, and several Japanese telephones are also part of my collection, it was only on my most recent trip that I had the opportunity to visit the NTT History Center in Tokyo, inspired by Dirk's SIG museum guide.

This collection archives and presents the entire history of telecommunications technology in Japan. In addition to a small introductory hands-on area, aimed primarily at schoolchildren, the museum provides a comprehensive display, spread over several floors, of the complete development of Japan's communications network technology throughout its history.

The museum is located several kilometres west of Shinjuku, an interesting tourist district of Tokyo that is also home to the world's busiest railway station in terms of daily passenger numbers. Consequently, finding the correct local train at Shinjuku Station in the direction of the museum can be somewhat stressful. Once you reach the correct destination station, you must also change to a bus. The journey is therefore quite time-consuming, so taking a taxi from Shinjuku Station is highly recommended. The journey takes approximately 25 minutes and costs around 7,000 yen (currently about €40). Admission to the museum is free.

The museum is open only on

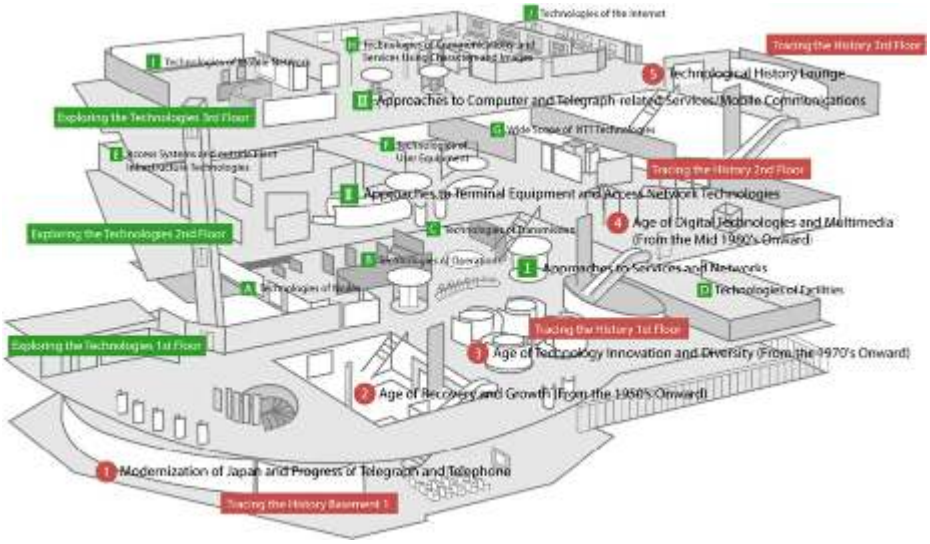

Although I had already visited Japan many times, and several Japanese telephones are also part of my collection, it was only on my most recent trip that I had the opportunity to visit the NTT History Center in Tokyo, inspired by Dirk's SIG museum guide.

This collection archives and presents the entire history of telecommunications technology in Japan. In addition to a small introductory hands-on area, aimed primarily at schoolchildren, the museum provides a comprehensive display, spread over several floors, of the complete development of Japan's communications network technology throughout its history.

The museum is located several kilometres west of Shinjuku, an interesting tourist district of Tokyo that is also home to the world's busiest railway station in terms of daily passenger numbers. Consequently, finding the correct local train at Shinjuku Station in the direction of the museum can be somewhat stressful. Once you reach the correct destination station, you must also change to a bus. The journey is therefore quite time-consuming, so taking a taxi from Shinjuku Station is highly recommended. The journey takes approximately 25 minutes and costs around 7,000 yen (currently about €40).

Although I had already visited Japan many times, and several Japanese telephones are also part of my collection, it was only on my most recent trip that I had the opportunity to visit the NTT History Center in Tokyo, inspired by Dirk's SIG museum guide.

This collection archives and presents the entire history of telecommunications technology in Japan. In addition to a small introductory hands-on area, aimed primarily at schoolchildren, the museum provides a comprehensive display, spread over several floors, of the complete development of Japan's communications network technology throughout its history.

The museum is located several kilometres west of Shinjuku, an interesting tourist district of Tokyo that is also home to the world's busiest railway station in terms of daily passenger numbers. Consequently, finding the correct local train at Shinjuku Station in the direction of the museum can be somewhat stressful. Once you reach the correct destination station, you must also change to a bus. The journey is therefore quite time-consuming, so taking a taxi from Shinjuku Station is highly recommended. The journey takes approximately 25 minutes and costs around 7,000 yen (currently about €40). Admission to the museum is free.

The museum is open only on Thursdays and Fridays, from 13:00 to 17:00. It is highly recommended to arrive at 13:00, as the four hours of opening time are just sufficient to gain a good overview of the collection.

Visitors are greeted very warmly by the staff in English. With their guidance, I was allowed to operate an operator-assisted exchange, a ZBSA exchange equipped with Strowger selectors, and the coin-detection mechanism of a payphone (sound-based) myself. As I did not want to take up too much of the staff's time, I identified myself as a *"denwa otaku"* (telephone enthusiast) with some background knowledge. The photographs of my collection were then received with great interest by the entire staff. They were particularly pleased to see the Japanese telephones in my collection. In general, the staff are very happy to welcome visitors from other countries to the collection.

Japan's first telephone conversation took place in 1890 between Tokyo and Yokohama, using manual operator switching and equipment manufactured under licence. In 1899, the telecommunications system was nationalised and placed under the control of the Ministry of Communications. This early government control led to the rapid standardisation of line impedances, signalling voltages and

Long way to save a phone box

William Arnold, an experimental, documentary photographer, caused a stir in the press recently by documenting a 1700 mile round trip he made from his home in Cornwall to Einacleit on the Isle of Lewis/ Harris in the Hebrides.

The purpose was to make the necessary 52 telephone calls to

Newly painted [William Arnold]

prevent the call box being removed.

William writes on "CaughtbytheRiver.net", 'I've launched this ... as part of my ongoing art project and general raging against the crumbling of the public realm – SAVING PUBLIC TELEPHONY.'

'Ideally, I will try to make these calls from the last double-door K6 kiosk in the country with a connected phone line.

'If this all sounds daft, it is probably because it is, but it is underpinned by a genuine desire to make connections between disparate rural and coastal localities, have real conversations that aren't mediated by a screen and of course the phone might actually be useful in an emergency!

'Why the Outer Hebrides? I have since 2017 been making work considering the ritual landscapes of the Atlantic seaboard, in particular West Cornwall where I live and Na h-Eileanan Siar (Lewis & Harris). The work considers these landscapes in their contemporary context and considers the weight given to some markers of heritage value over others. I think there's a link between the stones and the phones!'

He documented the trip on his instagram page @williamlawrencearnold and gave an interview to the BBC News page:

https://www.bbc.co.uk/news/articles/c0l5xnenek7o

As can be seen from his photo, the call box has an unusual double door. William believes it is the last of its type, which may exist to counter the strong winds prevalent on the Isle where a single door may have been dangerous. The doors had recently

Foul weather [William Arnold]

been repainted. William had taken a selection of 50p and 20p coins for his calls.

"It wasn't just 20 second phone calls, some people phoned me back

Phone box on Isle of Harris [Google maps]

so I had a few longer conversations," he said. "It took me just under two hours but the weather was rotten... There were 45mph winds which people could hear on the phone and it

On the phone [W. Arnold]

was hammering it down, so there was about an inch and a half of water at the bottom and my feet were cold by the end."

William had set up a crowd funding page to help cover the expenses of his trip so some of his calls were to folk who had contributed. He believes it's important for public safety to keep at least some phone boxes working. He tells of recent years in his locality in Cornwall where villages had power and water outages. He says, "Some of the villages had no normal mobile phone coverage, so having no internet as well meant the phone box was the only way of contacting the outside the world."

David Waters: Obituary

Sean Williams

THG Member David Waters passed away unexpectedly, 28th May 2026, after a brief spell in hospital.

David lived a varied and interesting life, Living in Horsham for a number of years, as well as time in Long Island, New York. During his career he spent time working with GCHQ, Sun Alliance, Ericsson and British Rail, latterly he founded Stagescripts, and was still actively involved with the business on a part time basis.

As a volunteer at Amberley Museum, David's love of telecommunications combined with his great personable nature enabled him to share his knowledge and interests with visitors, young and old. He had an excellent rapport with anyone that stopped to ask a question, and with his usual flamboyant and theatrical manner quickly turned a simple question into an interesting and often jovial conversation that left any visitor with a smile on their face and a real feeling of being welcomed to the museum.

David was instrumental in bringing the display of Teleprinters at Amberley Connected Earth to life, and being the first public accessible museum in the UK to have several active connections to the I-Telex network.

This interest in Teleprinters developed from an initial contact with me a few years ago, into a vast collection of machines and equipment from the era, including the need to construct a very smart new workshop and display area at his home – this new building was named "Hut 6" a reference to his past employment with GCHQ, and of course the well known Bletchley Park.

Many THG members will have met David at the display of Telex machines he helped with at Milton Keynes Museum a couple of years ago. David at this time had little experience with operating of Telex equipment, but quickly found his feet and was completely in his element discussing the system with members and the public.

David was also well known in Stage and Theatre circles, thanks to his founding of Stagescripts, a publishing facility that allowed writers and production companies to easily access previously unpublished works, and to act as a shop front for aspiring new writers.

David's simple and straight forward approach to everything in life helped showcase new talent, and his can do attitude encouraged many in this field to continue their work, and create opportunities for some that may never have seen their work put into production.

David's family arranged a fitting tribute to his life that was attended by family and friends, as well as colleagues from his varied career, as well as a number of volunteers from Amberley and other THG members. Even at this celebration of his life, he somehow managed to engineer a power cut, with the lights coming on half way through the service – something that everyone in attendance agreed was "Very David"

I will greatly miss his enthusiastic nature, and unfaltering support for expanding interest in collecting Teleprinters, as well as the many fun evenings spent discussing and planning the next display or how to attract more museums and individuals to the hobby.

Rest in Peace David, and thanks for your friendship, help and enthusiasm.

So What's A Howler?

Jack Ryan

Introduction

A Howler is basically a telephone receiver with a horn attached. It is adjusted to give maximum sound level output at about 135Hz and is used to signal an incoming telephone call in place of a magneto bell. The question remains, why use a Howler instead of a bell?

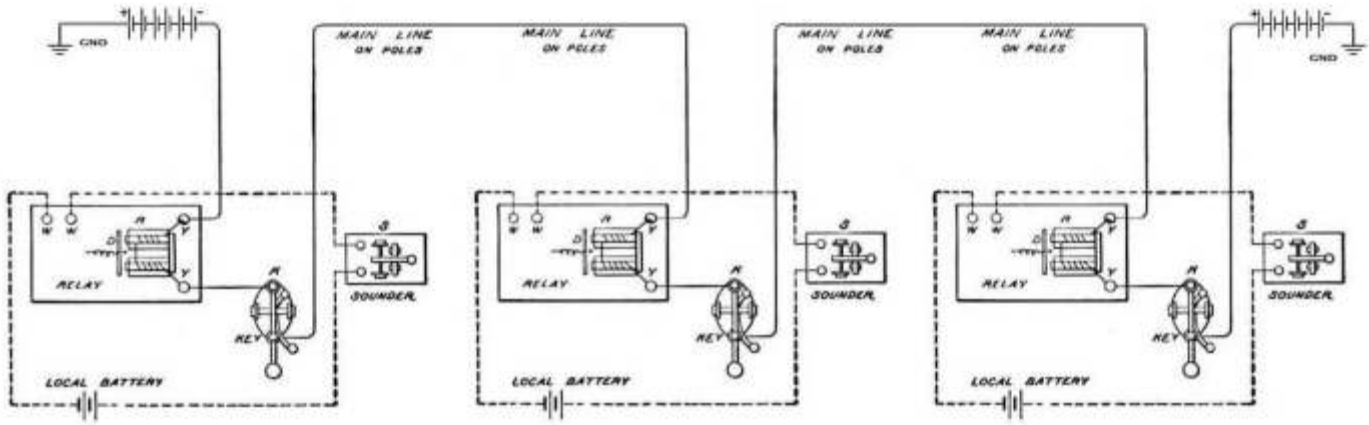

Basic configuration of a railway telegraph

History

In the late 19th century, telegraphy was the preferred method of communications for post offices but the telephone was becoming increasingly important as a means of communications. There was already many miles of wire strung across the country for telegraphy and duplicating that for the telephone would have been expensive – there had to be a way of using the existing telegraph wires for the telephone.

Francois van Rysselberghe (1846-1893) set out to provide a long-distance telephone using the existing telegraph networks. In Europe both the telegraph and telephone networks were owned by the state post offices so there was the opportunity to use the telegraph network to extend the telephone network. Van Rysselberghe was very successful in the European market and despite some initial reluctance, the British market as well.

Van Rysselberghe went to the United States in 1885 and successfully tested his system over a distance of about 1000 miles. Unfortunately, the telephone long distance operator, Bell, did not own the telegraph network so van Rysselberghe's demonstration, although highly successful, did not result in sales.

Charles Langdon-Davies built telephones based on the same principals and sold them to a new market

the railways. At that time, railways were growing fast and so was the requirement for communications between stations. Telegraph lines were already there and available to be used by the new telephones. His Phonopores were sold through his company, The Phonopore Construction Co. Ltd.

Morse key showing the shorting switch (top right)

Western Electric introduced what they called the Railway Composite Telephone and Telegraph System which enabled telephones to be used on the existing telegraph lines without interfering with the telegraph service – it was Western Electric's version of the Phonopore.

Operation – The Telegraph

A railway telegraph system is basically one large current loop where the tapping of a key completes the loop and causes a sounder (receiver) to click. The timing of the clicks represents Morse code and is interpreted by the operator as a text message.

The basic configuration of a railway telegraph is shown above. Each station is connected in series and the return path is via the Earth. Stations not transmitting have a shorting switch closed to complete the loop.

Clearly this is a party line where all stations hear all transmissions.

As it turns out, it is surprisingly simple to use local battery telephones on a telegraph line. The requirements are that:

1. Telegraphy is not affected and can continue without interference from telephony voice or calling signals.
2. Telephony can proceed at any time without interference from telegraphy signals.

This separation is possible because telegraph signals are very low in frequency while voice frequencies start at about 300Hz. Even Morse code sent at 30 words per

minute is mostly contained in a band between 0 and 100Hz. Two components are needed at each telegraph station to allow the telephones to operate; a capacitor to bridge the line and a non-inductive resistor across the relay to stop chatter when signalling a telephone call. Some additional components are needed at each end of the combined (telegraph and telephony) section of the line to prevent loss of telephony signals to ground via the batteries. A retardation coil (AF choke) and capacitor at each end of the line satisfies this requirement.

Operation – The Telephone The telephone is connected between the line and ground (the telephones are not connected in series) and is based on a standard local battery design but with a few additions. Some of the additions suppress clicks caused by the operation of the telegraph circuit; others are needed for signalling. A local battery telephone would work perfectly well even without click suppression – except for signalling. A standard magneto generates a ring signal between 16 and 20Hz and this would interfere with the telegraphy signals causing the relay the chatter; another signalling method is needed. In this system, as in the Phonopore, the induction coil is modified so that the primary winding can operate as an interrupter. When a call button is pressed, the interrupted current in the primary creates a high voltage signalling current in the secondary at about 135Hz. This frequency is high enough not to interfere with the telegraph signal. Another device is needed to respond to the high frequency signalling – this is the job of the Howler which emits a buzzing sound to alert the called party to an incoming call. The telephone can be in one of three states; waiting for a call, on a call or making a call.

Waiting For a Call

When the telephone is “on hook”, the Howler is connected from the line to ground via a capacitor (so as not to interfere with telegraph signals). If the call button on any other telephone is pressed, a high voltage call signal at about 135Hz is applied to the line and all the other telephone’s Howlers buzz. Here is an example of a Howler buzz:
http://www.cedarknolltelephone.com/cedartel/1chowl.wav

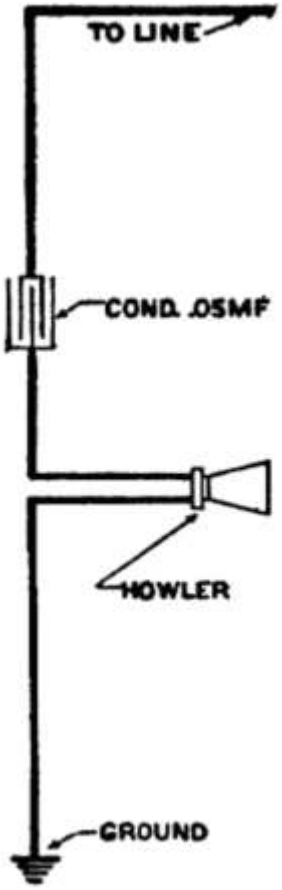

Waitning for a call

On a call

When the handset is lifted, the talk circuit is connected to the line and operates just as any local battery telephone would. The 2uF capacitor (condenser) prevents the loss of telegraph battery to ground and the retardation coil prevents low frequency telegraph clicks from entering the receiver.

Signalling

When the receiver is lifted and the call button is pressed, the primary of the induction coil is converted into an interrupter which then interrupts the primary current at the resonant frequency of the armature and spring combination – about 135Hz. This interrupted current induces a much larger voltage in the secondary winding which is applied to the line and causes all connected Howlers to buzz.

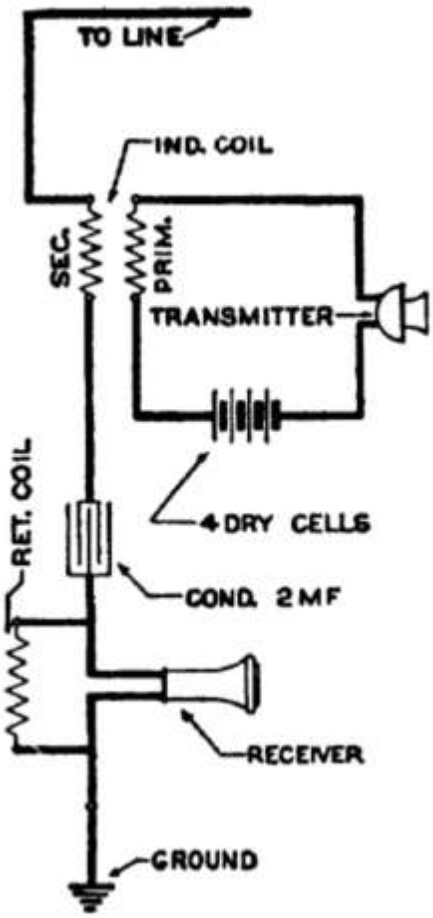

On a call

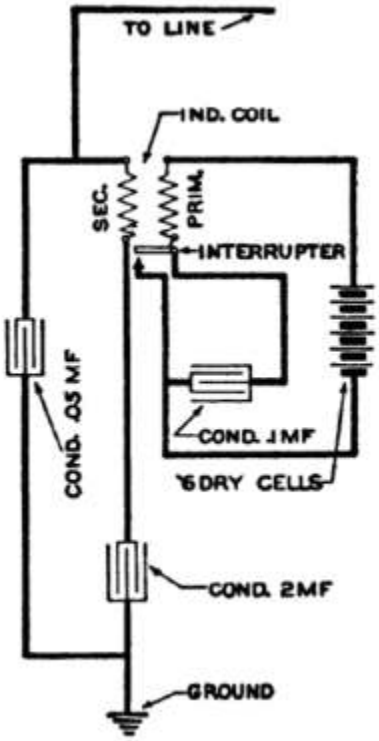

Signalling

Westerb Electric's Howler No 1A. The smaller of the two offerings

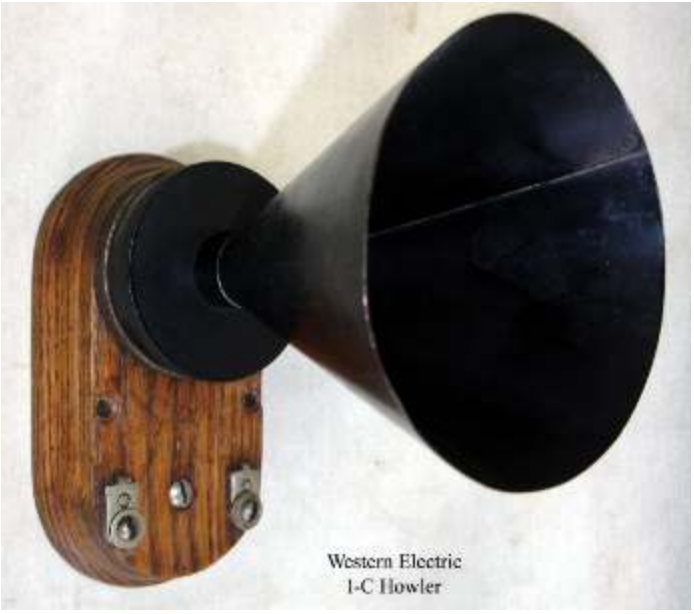

Western Electric's Howler No 1-c. Th larger of the two offerings. Right: Rear view showng that this model is based on a Bell receiver with the magnet folded over within the wooden mounting block.

WE Telephones For Combined Service

Right: Western Electric's Telephone Type 312-A with Howler No 1-A mounted above it.

Far right: Portable Telephone Type 314 packed for transport. It was intended to be carried on trains or by work parties and connected to the telegraph line for use in emergencies.

Opposite page: Left, Inside rear view showing battery storage. Right, Open in preparation for use. Connections need to be made to the telegraph line and to the rail (ground).

Below: Inside the Western Electric Type 312-A showing the interrupter components on the front of the induction coil. At the rear of the induction coil (looking like a smaller induction coil) is the retardation coil and on the right side are the call button contacts.

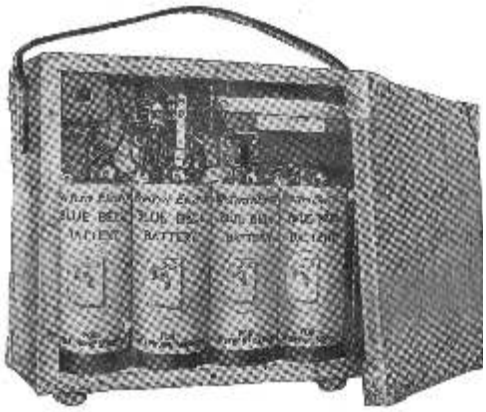

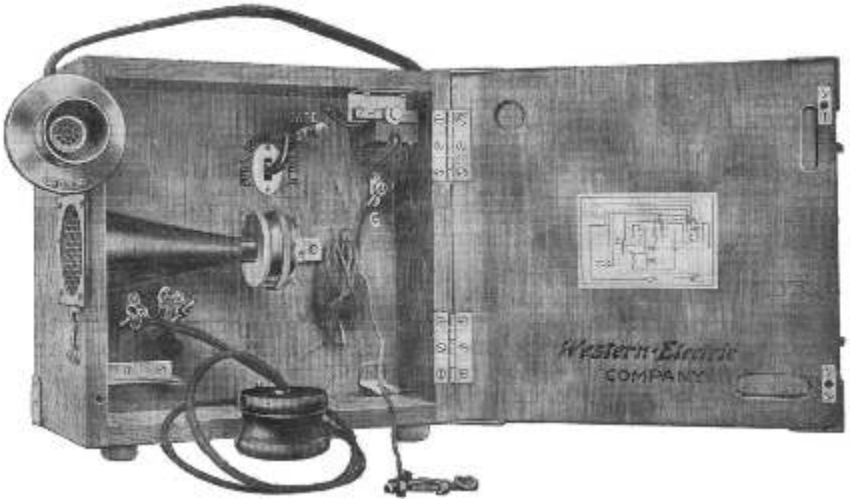

Bottom is the advertisement from Western Electric 1949, Dispatchinga nd Communications Eqeuipment

References

3. Railway Train Dispatching Telephone Systems, Western Electric, 1934
4. Composite Telephone and Telegraph System for Railway Service, Western Electric Bulletin T206, 1917
5. Pamphlets on Forestry in Washington, University of Washington, 1908
6. François van Rysselberghe: Pioneer of Long-Distance Telephony, Technology and Culture, Vol. 19, No. 4 (Oct., 1978), pp. 650-674, D. Gordon Tucker

Acknowledgments

I am indebted to the following for their help in the preparation of this article.

Tom Adams for supplying reference documents and in particular for supplying photographs of the Western Electric Type 312-A telephone and the Type 1-A and 1-C Howlers in his collection.

Steve Cichorsky for scanning and making available through the TCI library, documents referred to in this article. The TCI Library is at http://www.telephonecollectors.info/

This article first appeared in" The Exchange", the journal of the Sound & Telecommunications Association Australasia for November 2016.

No. 1C Howler

No. 1C Howler

The No. 1C Howler is equipped with a bi-polar magnet structure of the same general construction as in Western Electric receivers. It is wound to 1,000 ohms resistance. The diaphragm of the howler may be accurately adjusted in relation to the pole pieces by rotating the front half of the case. When the correct position is obtained the case may be locked in position by means of a ring nut. For Morse calling in signal circuit. It is mounted on a wooden base, and is 6¼" x 6" x 3½", overall.

THG Online Virtual Swapmeet Group On Facebook

Ruby Monnery

THG Facebook Group - Recent Activity

Jason Workman

Puzzle Page

John Cranston

The tempting prize awarded to the sender of the first correct solution drawn from the hat on 1 October 2026 will be a copy of The Early History of the Telephone in Bath by M J Hall Ellis. It's long out of print and very hard to find, so have a go (try Google if you're stuck) and send your entries to cranston1955@gmail.com.

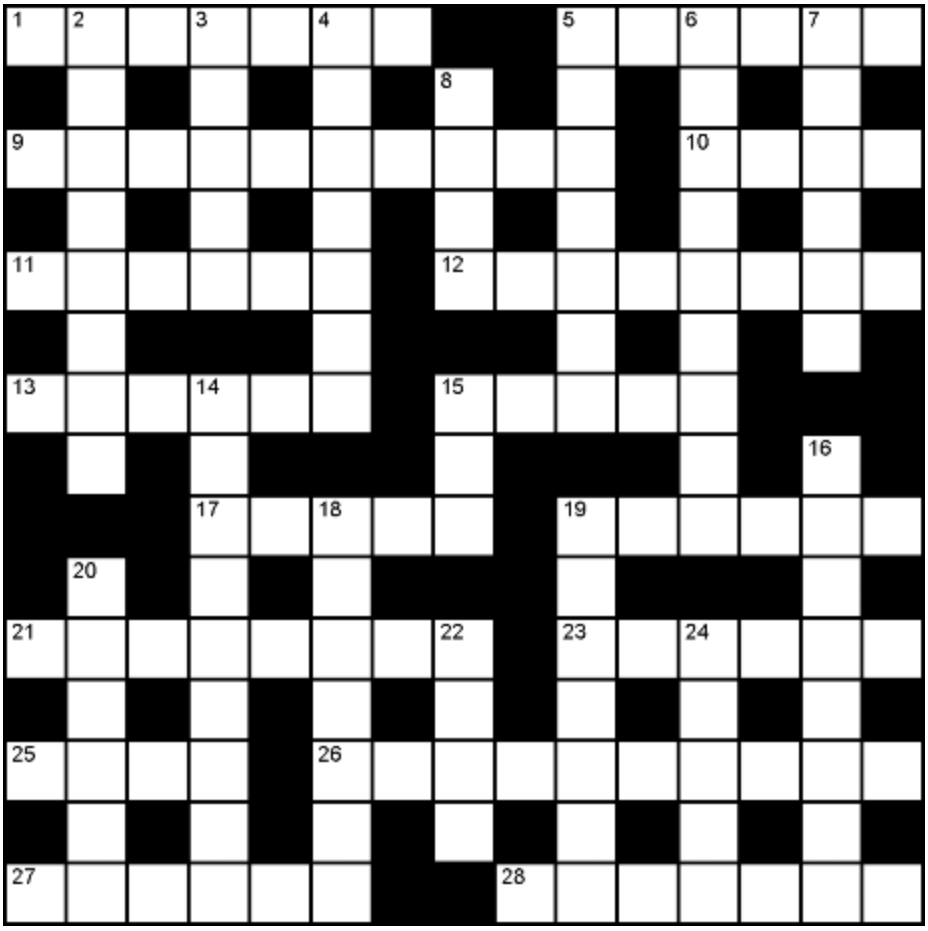

ACROSS:

1 Signalling device in an Ericsson Skeleton, for example (7)
5 Alec, inventor of pulse code modulation (6)
9/11 The GPO bugged calls from Fort Belvedere during this constitutional conflict (10,6)
10 Telephone accessories firm producing kiosk coinboxes (4)
11 See 9
12 Bernard, the voice of BT's Buzby (8)
13 BT's name for the Mitel SX200 (6)
15 Direction in which to slide Bellset no. 44 switch to speak to extension (5)
17 Answering machine no 202A (5)
19 Rose, jazz singer who imitated the engaged tone in her recording of 21 (6)
21 Song used in a 1990 BT Cellnet advert (4,4)
23 What the MR button on a Viscount phone will do (6)
25/26 Diodes, for example - or half-clippies? (14)
27 Smear (6)
28 Tree; AT&T recommended exchange name for prefix 29 (7)

DOWN:

2/20 Sussex tourist attraction, home to a Kiosk No 4 (8,6)
3 Items used to attach D-plates and other markings to poles (5)
4 Ford van used by PO Telephones and BT (7)
5 Tone, key - or tinnitus? (7)
6 One who displays, as Bell was at the Philadelphia Centennial Exposition (9)
7 International unit of telephone traffic (6)
8 One of four glass examples TIM contained? (4)
14 Intelsat I (5,4)
15 Indicator of impedance (eg 1 = 4000 ohms) (1,1,1)
16 Establishments from which the Electrophone service broadcast (8)
18 Enriched bread from the land of the Crosscall phone (7)
19 BT competitor (1981-97) with its own payphones (7)
20 See 2
22 _____ Savage (1936-2000), telephone operator turned pop singer (4)
24 Discourage, avert (5)

Answers to the crossword in THJ issue 136

ACROSS: 1/5 Andrew Emmerson 8 Timbered 9 Reduce 11 Ralph Perring 14 Moss 15 Chestnut 18 Stanhope 19 Rate 21 Bedfordshire 24 Unison 26 Crossbar 27 Rodney.
DOWN: 2/25 Neil Papworth 3 Robertson 4 Warble 5 End 6 Mercedes 7 Radar 10 Conduits 12 Hackers 13 Northern 16 Threefold 17 Doorknob 20 Nipper 22 Fuses 23 FTSE 25 Par.
The winner was Linda Milner.

Events

Milton Keynes in October

I am pleased to announce that a T.H.G. swapmeet will be held at the Mathiesen Community Centre, 4 Mathiesen Rd, Bradville, Milton Keynes, MK13 7AG on Saturday 17th October 2026.

The swapmeet will open to THG members at 10:00 and close at 13:00. There are 20 tables that are available to be booked. There is a charge of £8.00 per table. We are no longer taking payments on the day. Please use the link below which will take you to the membership site and you can then pay for your table in advance.

https://membermojo.co.uk/thg/store

It will take a day or two to set up the payment link. Please also let me know if you are making a booking. Laurence Rudolf, telephone 0330-321-1844 (option 5) or email events@thg.org.uk Those who have taken a table and are setting up will have access to the site from 09:00.

The community centre is just a couple of miles from the Telephone Museum which is itself situated inside the Milton Keynes Museum, McConnell Drive, Wolverton, Milton Keynes, MK12 5EL. The director of the Museum, Bill Griffiths, has again very kindly agreed to wave the museum's admission charge on 17th October 2026 so that THG. members can visit the telephone museum without incurring any charge.

Laurence Rudolf, THG Events Officer

Mathieson Centre [Google maps]

This magazine was printed by
Flexpress
6 Coal Cart Road, Interchange, Birstall,
LEICESTER LE4 3BY
http://www.flexpress.co.uk/

THG Committee

Hon. Vice President.....Ivor Flint, **honvp@thg.org.uk**
Chair.....Brenden Hill, **chair@thg.org.uk**
Vice Chair.....John Mulrane, **vicechair@thg.org.uk**
General Secretary.....Andy Grant, **secretary@thg.org.uk**
Membership Secretary.....Alex Clark, **membership@thg.org.uk**
Treasurer.....Ian Bushrod, **treasurer@thg.org.uk**
Archivist and DTP.....Sam Hallas, **archive@thg.org.uk**
Events.....Laurence Rudolf, **events@thg.org.uk**
Surplus Equipment Co-ordinator.....Brenden Hill, **salvage@thg.org.uk**
Social Media and OVS.....Ruby Ella Monnery, **socialmedia@thg.org.uk**
Journal.....John Mulrane, **vicechair@thg.org.uk**
Assistant Journal Editor.....Jason Workman, **jason@thg.org.uk**
THGR Technical Support*.....Ian Bushrod **thgr@thg.org.uk**

Co-opted Committee Members
THG Docs Website*.....Peter Walker **documents@thg.org.uk**

*for THGR and docs membership and password enquiries, please contact the Membership Secretary, Alex Clark

Call box in Peel, IoM [Richard Haydon] (AI has been used to remove some ugly green dustbins)